REVISIONS				
ZONE	REV	DESCRIPTION	DATE	APPROVED
			03-14-2014	

MDE-8051 Rev C

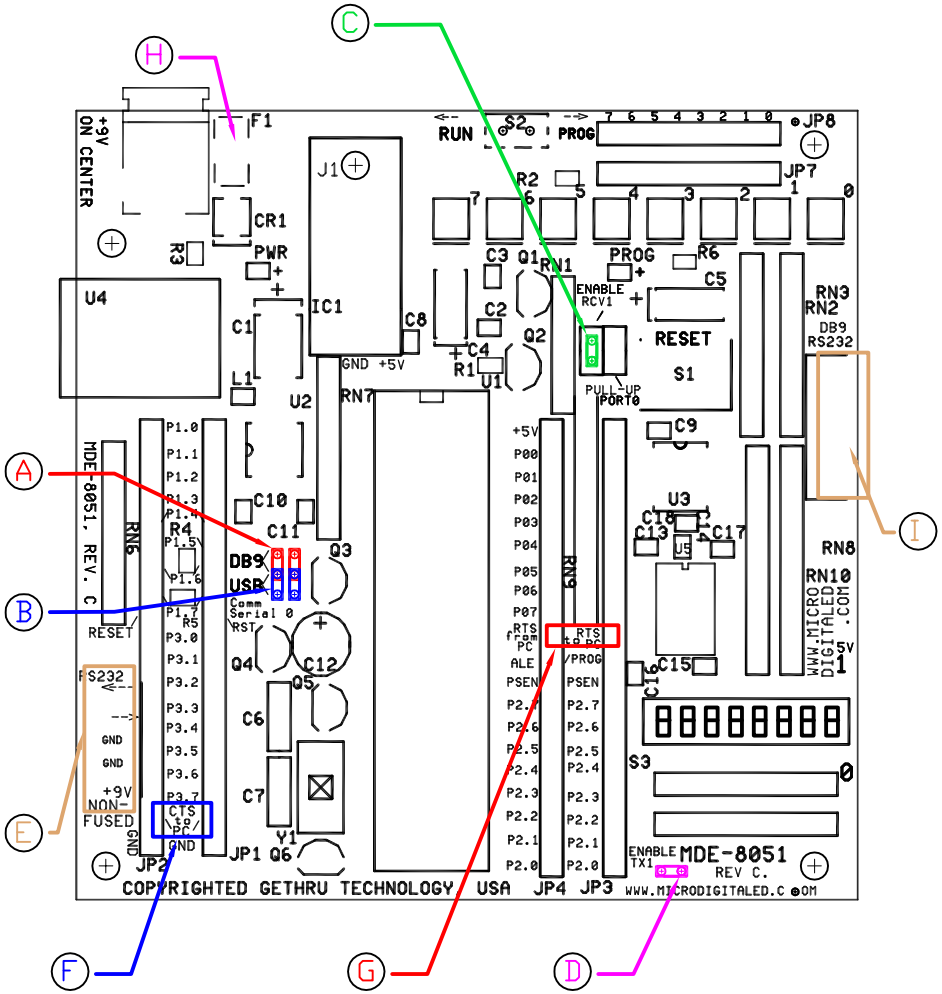

A. Set these two jumpers to the upper position as shown will connect serial 0 to the DB9. When serial 0 is connected to DB9 connector, DO NOT connect neither the jumpers (C) nor (D). Jumpers (C) and (D) connect serial 1 to DB9.

B. Set these two jumpers to the lower position as shown will connect serial 0 to the USB. This is the default connection.

C. This jumper connects RX in DB9 to serial 1's RX. DO NOT connect this jumper if jumpers (A) are installed because jmupers (A) connect serial 0 to the DB9 too.

D. This jumper connects TX in DB9 to serial 1's TX. DO NOT connect this jumper if jumper (A) are installed because jmupers (A) connect serial 0 to the DB9 too.

E. This right angle header contains TX and RX in RS232 signal level from the DB9 connector. It also connects to the +9V from the barrel connector to the power adaptor (non fused).

F. CTS signal in the DB9 is accessible here.

G. RTS signall in the DB9 is accessible here.

H. A PTC resettable fuse is installed.

I. RS232 DB9 connector is here.

	GETHRU TECHNOLOGY			
	MDE-8051			
	SIZE A	FSCM NO.	DWG NO. 95001015	REV C
	SCALE		SHEET	

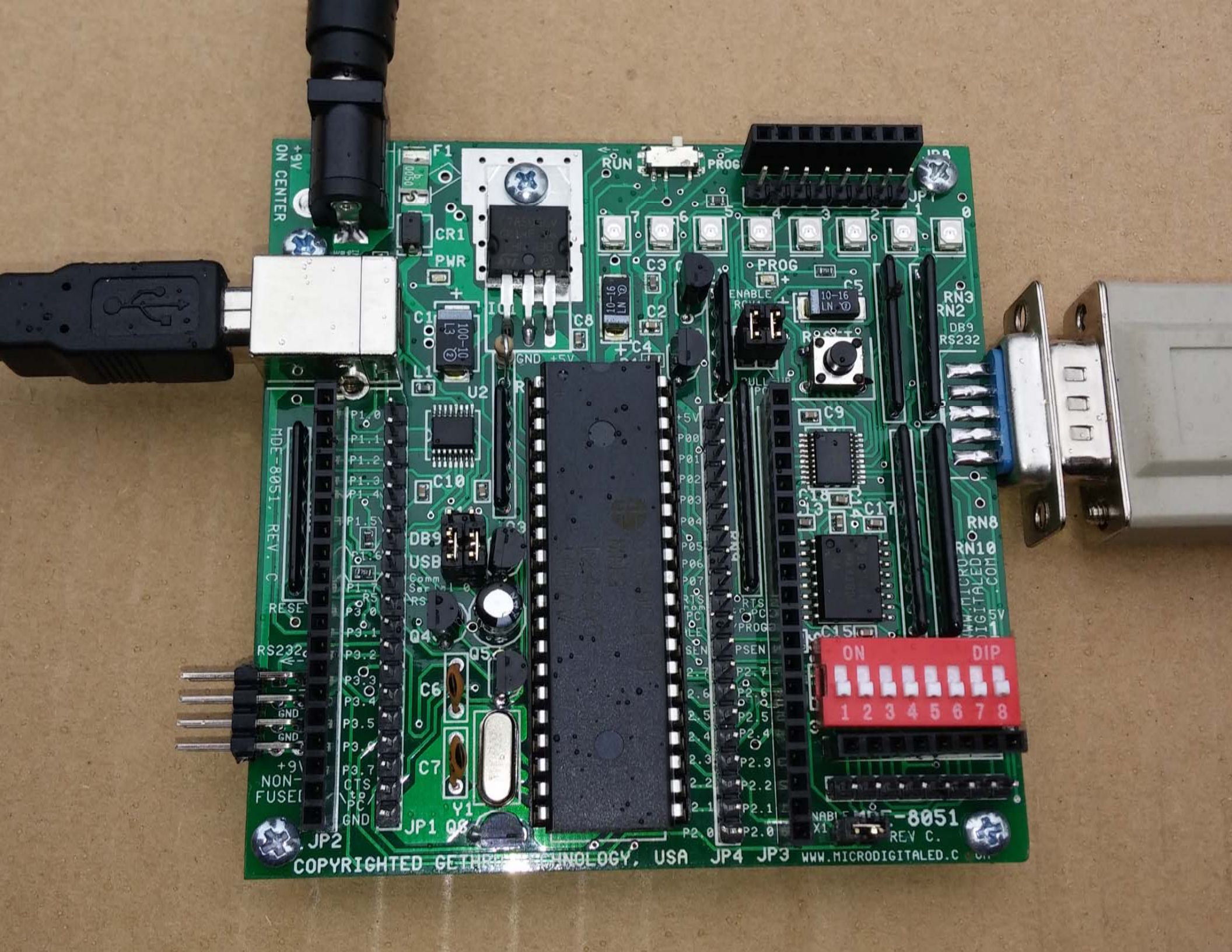
+9V
ON CENTER
F1
CR1
PWR
RUN
PROG
JP7
C3
C2
C8
C4
C5
PROG
ENABLE
RN3
RN2
DB9
RS232
C1
L1
U2
GND +5V
C9
C10
C13
C17
C18
C15
RN8
RN10
MDE-8051, REV. C
DB9
USB
Comm
Serial 0
RS
Q4
Q5
C6
C7
Y1
JP1
JP2
JP3
JP4
RS232
GND
GND
NON-FUSED
P1.0
P1.1
P1.2
P1.3
P1.4
P1.5
P1.6
P1.7
P3.0
P3.1
P3.2
P3.3
P3.4
P3.5
P3.7
CTS to PC
GND
+5V
P00
P01
P02
P03
P04
P05
P06
P07
RTS
PC
PROG
PSEN
P2.7
P2.6
P2.5
P2.4
P2.3
P2.2
P2.1
P2.0
ON
DIP
1 2 3 4 5 6 7 8
X1
MDE-8051
REV C.
WWW.MICRODIGITALED.COM
COPYRIGHTED GETHREE TECHNOLOGY, USA
WWW.MICRODIGITALED.C